300-410 Dumps

Implementing Cisco Enterprise Advanced Routing and Services (ENARSI)

https://www.certleader.com/300-410-dumps.html

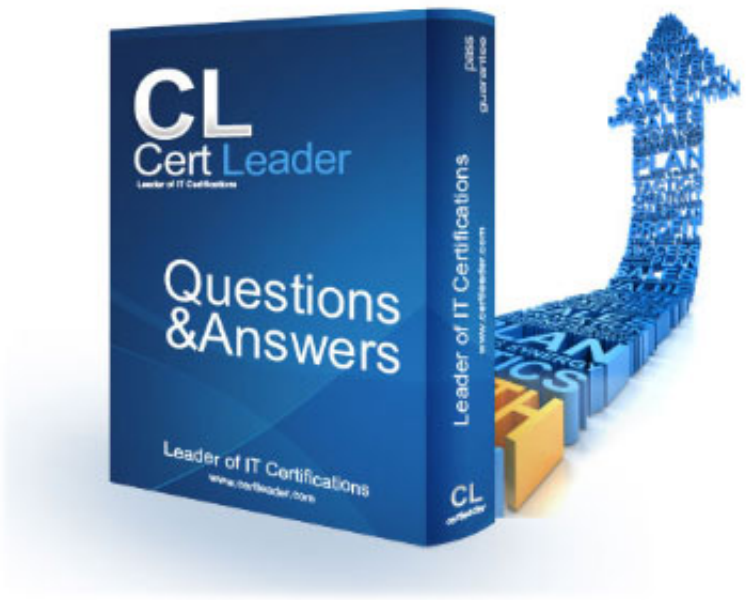

NEW QUESTION 1
Refer to the exhibit.

```
config t
flow record v4_r1
match ipv4 tos
match ipv4 protocol
match ipv4 source address
match ipv4 destination address
match transport source-port
match transport destination-port
collect counter bytes long
collect counter packets long
!
flow exporter EXPORTER-1
  destination 172.16.10.2
  transport udp 90
  exit
!
flow monitor FLOW-MONITOR-1
  record v4_r1
  exit
!
ip cef
!
interface Ethernet0/0.1
  ip address 172.16.6.2 255.255.255.0
  ip flow monitor FLOW-MONITOR-1 input
!
```

Why is the remote NetFlow server failing to receive the NetFlow data?

A. The flow exporter is configured but is not used.
B. The flow monitor is applied in the wrong direction.
C. The flow monitor is applied to the wrong interface.
D. The destination of the flow exporter is not reachable.

Answer: D

NEW QUESTION 2
Refer to the exhibit.

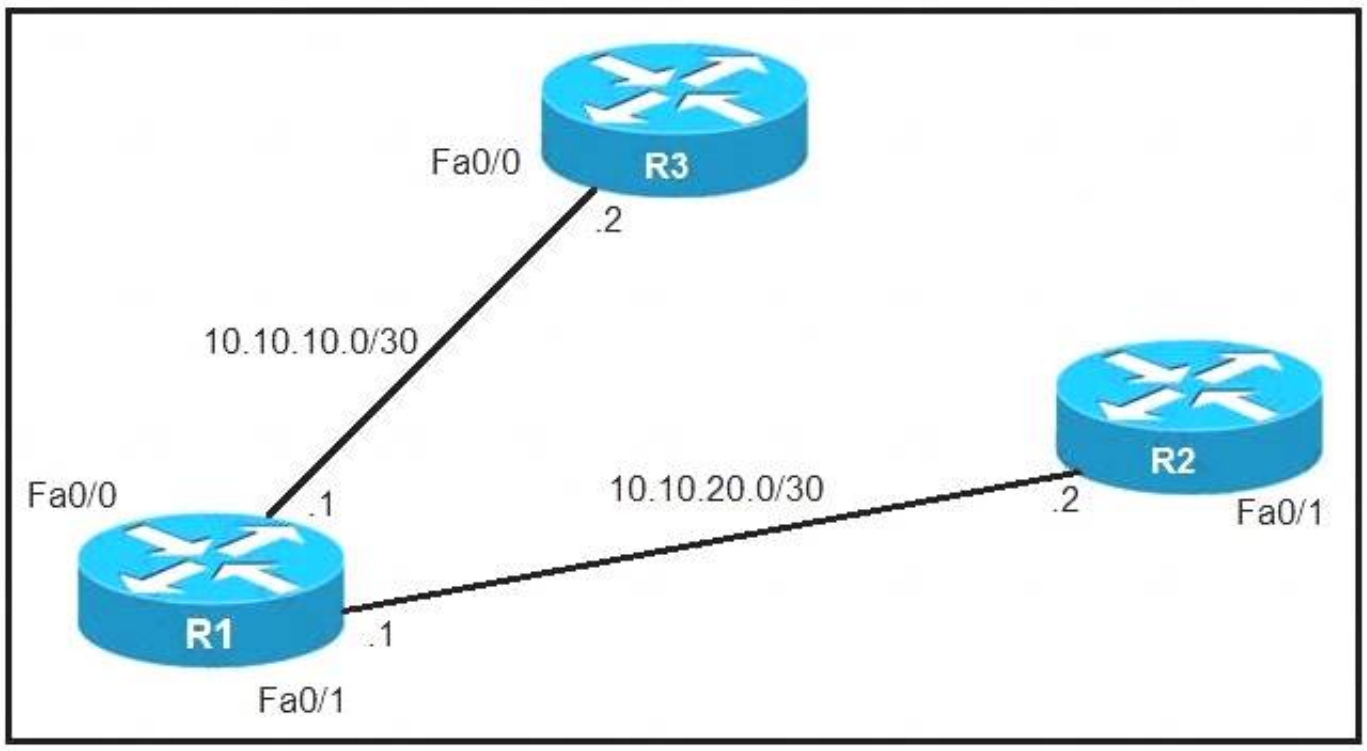

An IP SLA was configured on router R1 that allows the default route to be modified in the event that Fa0/0 loses reachability with the router R3 Fa0/0 interface. The route has changed to flow through
router R2. Which debug command is used to troubleshoot this issue?

A. debug ip flow
B. debug ip sla error
C. debug ip routing
D. debug ip packet

Answer: C

NEW QUESTION 3
Refer to the exhibit.

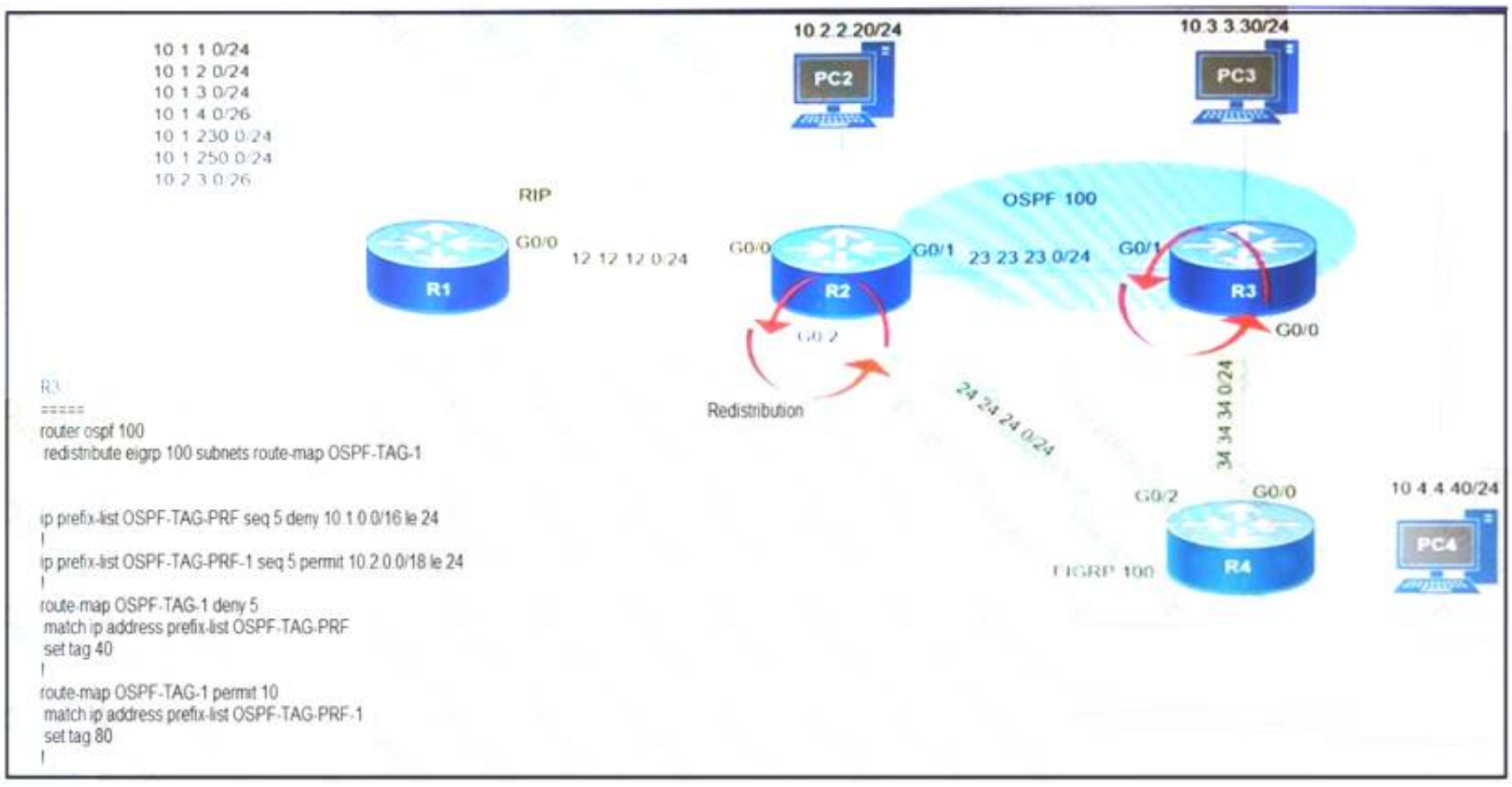

Which subnet is redistributed from EIGRP to OSPF routing protocols?

A. 10.2.2.0/24
B. 10.1.4.0/26
C. 10.1.2.0/24
D. 10.2.3.0/26

Answer: A

NEW QUESTION 4
Refer to the exhibit.

```
R1(config)#route-map ADD permit 20
R1(config-route-map)#set tag 1

R1(config)#router ospf1
R1(config-router)#redistribute rip subnets route-map ADD
```

Which statement about R1 is true?

A. OSPF redistributes RIP routes only if they have a tag of one.
B. RIP learned routes are distributed to OSPF with a tag value of one.
C. R1 adds one to the metric for RIP learned routes before redistributing to OSPF.
D. RIP routes are redistributed to OSPF without any changes.

Answer: B

NEW QUESTION 5
Drag and drop the DHCP messages from the left onto the correct uses on the right.

DHCPACK	server-to-client communication, refusing the request for configuration parameters
DHCPINFORM	client-to-server communication, indicating that the network address is already in use
DHCPNAK	server-to-client communication with configuration parameters, including committed network address
DHCPDECLINE	client-to-server communication, asking for only local configuration parameters that the client has already externally configured as an address

A. Mastered

B. Not Mastered

Answer: A

Explanation:

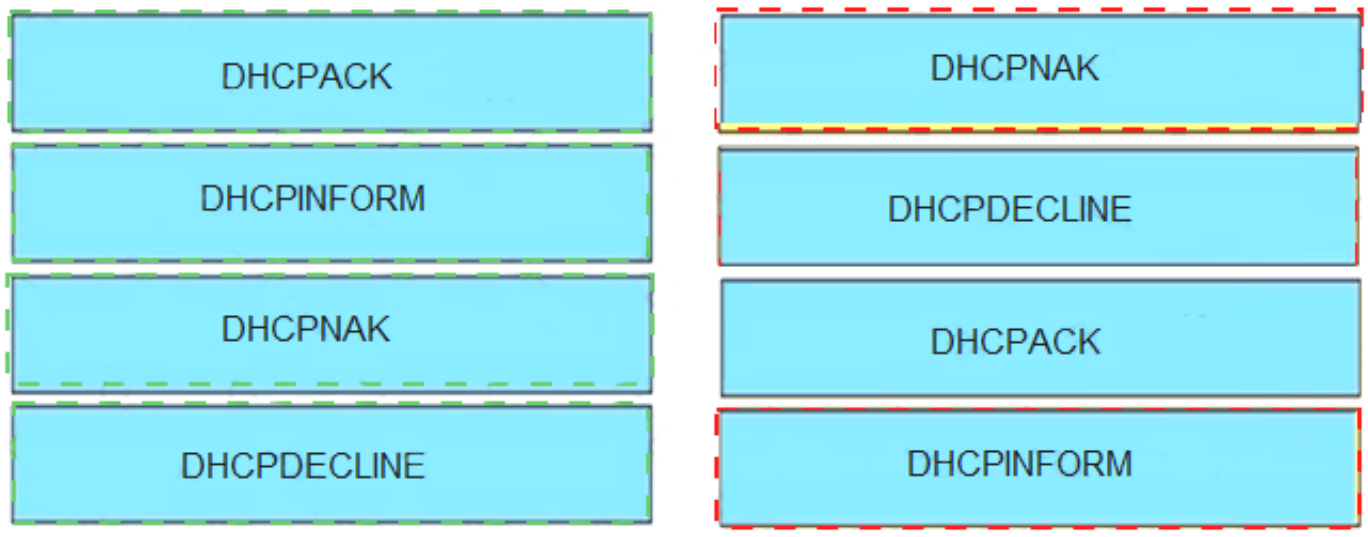

NEW QUESTION 6
Refer to the exhibit.

```
R1#show running-config | section dhcp
ip dhcp excluded-address 192.168.1.1 192.168.1.49
ip dhcp pool DHCP
   network 192.168.1.0 255.255.255.0
   default-router 192.168.1.1
   dns-server 8.8.8.8
   lease 0 12
```

Users report that IP addresses cannot be acquired from the DHCP server. The DHCP server is configured as shown. About 300 total nonconcurrent users are using this DHCP server, but none of them are active for more than two hours per day. Which action fixes the issue within the current resources?

A. Modify the subnet mask to the network 192.168.1.0 255.255.254.0 command in the DHCP pool
B. Configure the DHCP lease time to a smaller value
C. Configure the DHCP lease time to a bigger value
D. Add the network 192.168.2.0 255.255.255.0 command to the DHCP pool

Answer: B

NEW QUESTION 7
Refer to the exhibit.

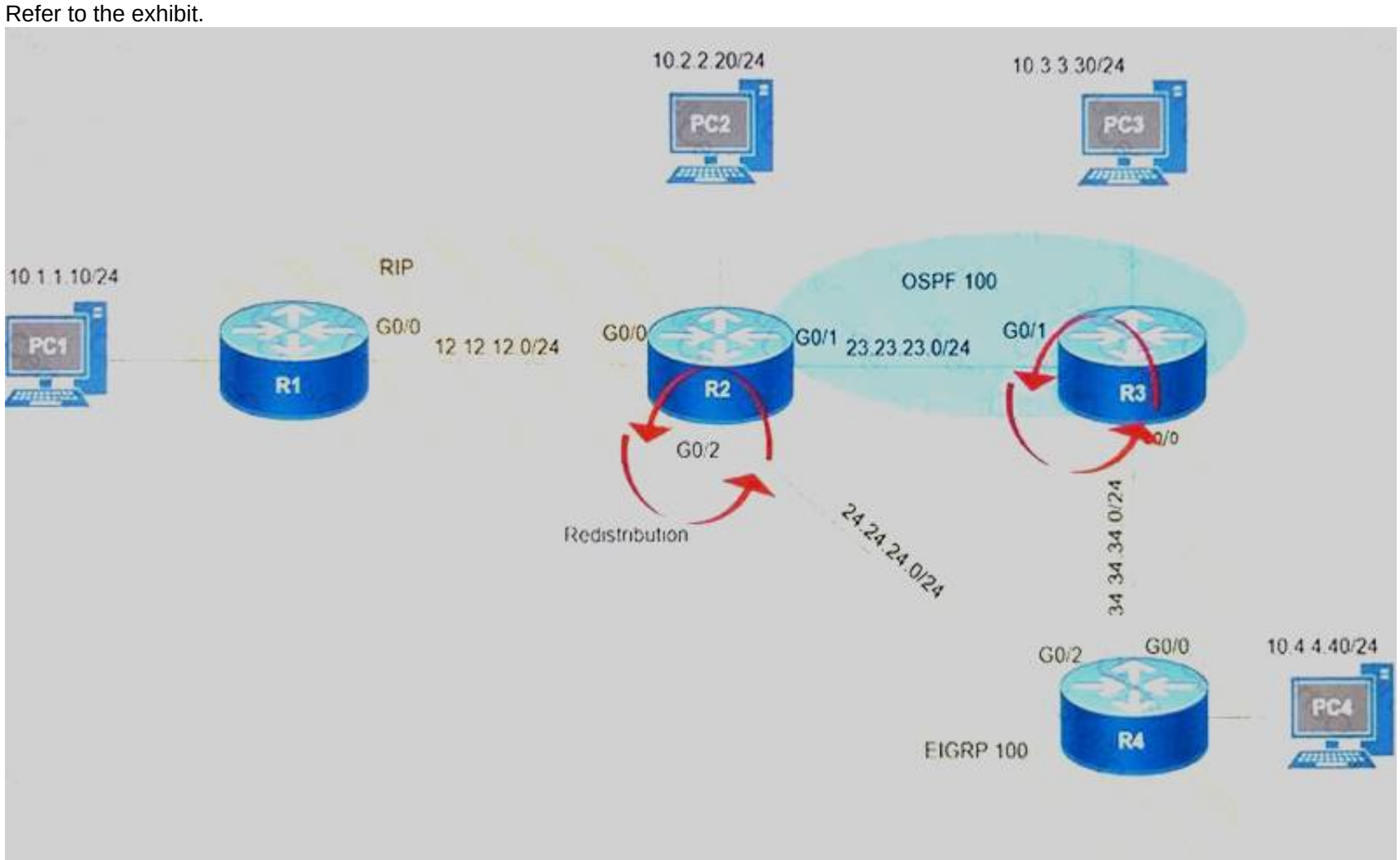

After redistribution is enabled between the routing protocols; PC2, PC3, and PC4 cannot reach PC1. Which action can the engineer take to solve the issue so that all the PCs are reachable?

A. Set the administrative distance 100 under the RIP process on R2.
B. Filter the prefix 10.1.1.0/24 when redistributed from OSPF to EIGRP.
C. Filter the prefix 10.1.1.0/24 when redistributed from RIP to EIGRP.
D. Redistribute the directly connected interfaces on R2.

Answer: B

NEW QUESTION 8
When provisioning a device in Cisco DNA Center, the engineer sees the error message “Cannot select the device. Not compatible with template”. What is the reason for the error?

A. The template has an incorrect configuration.
B. The software version of the template is different from the software version of the device.
C. The changes to the template were not committed.
D. The tag that was used to filter the templates does not match the device tag.

Answer: B

NEW QUESTION 9
Refer to the exhibit.

```
!
neighbor 10.222.1.1 route-map SET-WEIGHT in
neighbor 10.222.1.1 remote-as 1
!
ip as-path access-list 200 permit ^690$
ip as-path access-list 200 permit ^1800
!
route-map SET-WEIGHT permit 10
 match as-path 200
 set local-preference 250
 set weight 200
```

A router receiving BGP routing updates from multiple neighbors for routers in AS 690. What is the reason that the router still sends traffic that is destined to AS 690 to a neighbor other than 10.222.1.1?

A. The local preference value in another neighbor statement is higher than 250.
B. The local preference value should be set to the same value as the weight in the route map.
C. The route map is applied in the wrong direction.
D. The weight value in another statement is higher than 200.

Answer: D

NEW QUESTION 10
Refer to the exhibit.

```
R1#show ip ssh
SSH Disabled – version 1.99
%Please create RSA keys to enable SSH (and of atleast 768 bits for SSH v2).
Authentication timeout: 120 secs; Authentication retries: 3
Minimum expected Diffie Hellman key size: 1024 bits
IOS Keys in SECSH format (ssh-rsa, base64 encoded) : NONE
R1#
```

An engineer is trying to connect to a device with SSH but cannot connect. The engineer connects by using the console and finds the displayed output when troubleshooting. Which command must be used in configuration mode to enable SSH on the device?

A. no ip ssh disable
B. ip ssh enable
C. ip ssh version 2
D. crypto key generate rsa

Answer: D

NEW QUESTION 10
Drag and drop the addresses from the left onto the correct IPv6 filter purposes on the right.

A. Mastered
B. Not Mastered

Answer: A

Explanation:

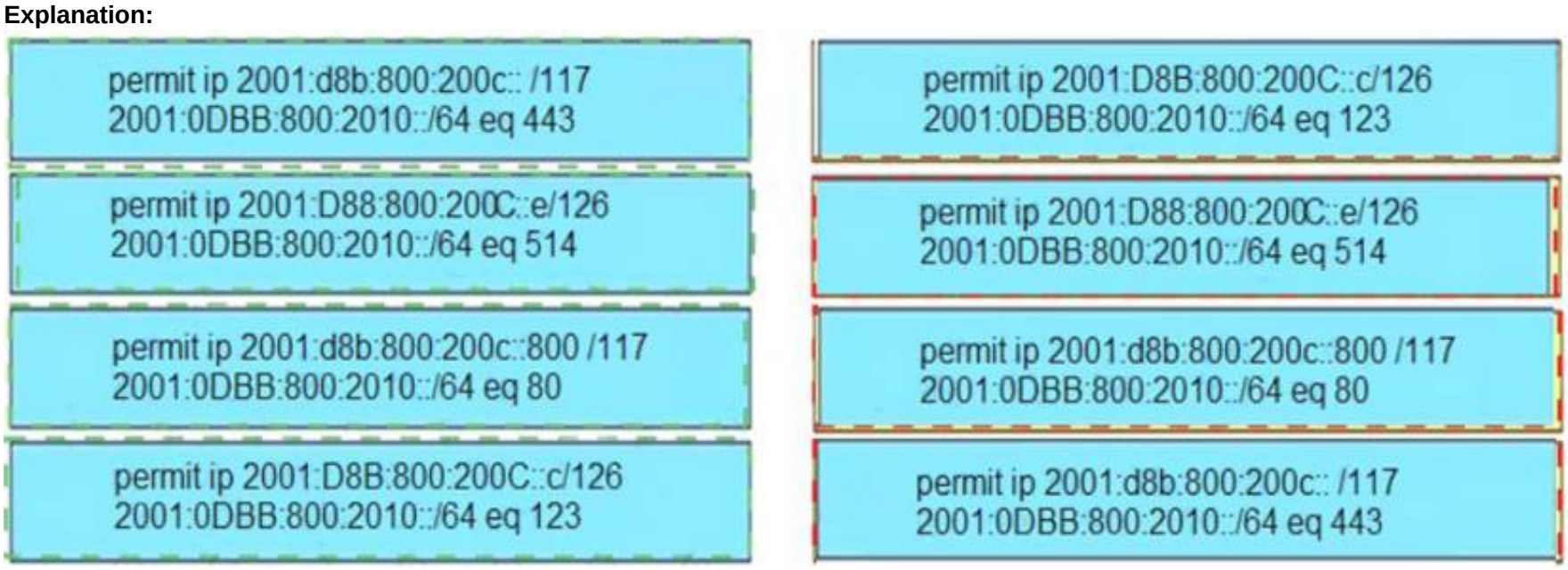

NEW QUESTION 15
Refer to the exhibit.

```
Router# show tag-switching tdp bindings
(…)
tib entry: 10.10.10.1/32, rev 31
        local binding: tag: 18
        remote binding: tsr: 10.10.10.1:0, tag: imp-null
        remote binding: tsr: 10.10.10.2:0, tag: 18
        remote binding: tsr: 10.10.10.6:0, tag: 21
tib entry: 10.10.10.2/32, rev 22
        local binding: tag: 17
        remote binding: tsr: 10.10.10.2:0, tag: imp-null
        remote binding: tsr: 10.10.10.1:0, tag: 19
        remote binding: tsr: 10.10.10.6:0, tag: 22
```

What does the imp-null tag represent in the MPLS VPN cloud?

A. Pop the label
B. Impose the label
C. Include the EXP bit
D. Exclude the EXP bit

Answer: C

NEW QUESTION 16
Drag and drop the packet types from the left onto the correct descriptions on the right.

data plane packets	user-generated packets that are always forwarded by network devices to other end-station devices
control plane packets	network device generated or received packets that are used for the creation of the network itself
management plane packets	network device generated or received packets; packets that are used to operate the network
services plane packets	user-generated packets that are forwarded by network devices to other end-station devices, but that require higher priority than the normal traffic by the network devices

A. Mastered
B. Not Mastered

Answer: A

Explanation:

data plane packets	data plane packets
control plane packets	control plane packets
management plane packets	management plane packets
services plane packets	services plane packets

NEW QUESTION 19
Refer to the exhibit.

```
Router#show ip route
<output omitted>
Gateway of last resort is not set

        192.168.1.0/32 is subnetted, 1 subnets
O            192.168.1.1 [110/11] via 192.168.12.1, 16:56:40, Ethernet0/0
        192.168.2.0/24 is variably subnetted, 2 subnets, 2 masks
C            192.168.2.0/24 is directly connected, Loopback0
L            192.168.2.2/32 is directly connected, Loopback0
        192.168.3.0/24 is variably subnetted, 2 subnets, 2 masks
C            192.168.3.0/24 is directly connected, Ethernet0/1
L            192.168.3.1/32 is directly connected, Ethernet0/1
        192.168.12.0/24 is variably subnetted, 2 subnets, 2 masks
C            192.168.12.0/24 is directly connected, Ethernet0/0
L            192.168.12.2/32 is directly connected, Ethernet0/0
Router#show running-config | section ospf
router ospf 1
 summary-address 10.0.0.0 255.0.0.0
 redistribute static subnets
 network 192.168.3.0 0.0.0.255 area 0
 network 192.168.12.0 0.0.0.255 area 0
Router#
```

An engineer is trying to generate a summary route in OSPF for network 10.0.0.0/8, but the summary route does not show up in the routing table. Why is the summary route missing?

A. The summary-address command is used only for summarizing prefixes between areas.
B. The summary route is visible only in the OSPF database, not in the routing table.
C. There is no route for a subnet inside 10.0.0.0/8, so the summary route is not generated.

D. The summary route is not visible on this router, but it is visible on other OSPF routers in the same area.

Answer: A

NEW QUESTION 23
Refer to the exhibit.

```
Router#show running-config | include ip route
ip route 192.168.2.2 255.255.255.255 209.165.200.225 130
Router#show ip route

<output omitted>

Gateway of last resort is not set

        192.168.1.0/32 is subnetted, 1 subnets
C               192.168.1.1 is directly connected, Loopback0
        192.168.2.0/32 is subnetted, 1 subnets
O               192.168.2.2[110/11] via 192.168.12.2, 00:52:09, Ethernet0/0
        192.168.12.0/24 is variably subnetted, 2 subnets, 2 masks
C               192.168.12.0/24 is directly connected, Ethernet0/0
L               192.168.12.1/32 is directly connected, Ethernet0/0
        209.165.200.0/24 is variably subnetted, 2 subnets, 2 masks
C               209.165.200.0/24 is directly connected, Ethernet0/1
                209.165.200.226/32 is directly connected, Ethernet0/1
```

An engineer configures a static route on a router, but when the engineer checks the route to the destination, a different next hop is chosen. What is the reason for this?

A. Dynamic routing protocols always have priority over static routes.
B. The metric of the OSPF route is lower than the metric of the static route.
C. The configured AD for the static route is higher than the AD of OSPF.
D. The syntax of the static route is not valid, so the route is not considered.

Answer: C

NEW QUESTION 24
Refer to the exhibit.

```
TAC+: TCP/IP open to 171.68.118.101/49 failed --
Destination unreachable; gateway or host down
AAA/AUTHEN (2546660185): status = ERROR
AAA/AUTHEN/START (2546660185): Method=LOCAL
AAA/AUTHEN (2546660185): status = FAIL
As1 CHAP: Unable to validate Response. Username chapuser: Authentication failure
```

Why is user authentication being rejected?

A. The TACACS+ server expects “user”, but the NT client sends “domain/user”.
B. The TACACS+ server refuses the user because the user is set up for CHAP.
C. The TACACS+ server is down, and the user is in the local database.
D. The TACACS+ server is down, and the user is not in the local database.

Answer: D

NEW QUESTION 26
Refer to the exhibit.

```
R1 #show ip bgp summary
BGP router identifier 192.168.1.1, local AS number 65000
<output omitted>
Neighbor        V  AS     MsgRcvd  MsgSent    Tblver  InQ  OutQ  Up/Down   State/PfxRcd
192.168.2.2     4  65000       28       28        22    0     0  00:21:31             0
R1#show ip bgp
BGP table version is 22, local router ID is 192.168.1.1
Status codes: s suppressed, d damped, h history, * valid, > best, i – internal,
              r RIB-failure, s stale, m multipath, b backup-path, f RT-Filter,
              x best-external, a additional-path, C RIB-compressed,
Origin codes: i – IGP, e – EGP, ? – incomplete
RPKI validation codes: V valid, I invalid, N Not found

     Network          Next Hop            Metric LocPrf         Weight       Path
*>   172.16.25.0/24   209.165.200.225          0              32768        ?
R1#
```

```
R2 #show ip bgp summary
BGP router identifier 192.168.2.2, local AS number 65000
<output omitted>
Neighbor        V  AS     MsgRcvd  MsgSent    Tblver  InQ  OutQ  Up/Down   State/PfxRcd
192.168.1.1     4  65000       29       28         3    0     0  00:22:07             1
192.168.3.3     4  65000        7        8         3    0     0  00:02:55             0
R2#show ip bgp
BGP table version is 3, local router ID is 192.168.2.2
Status codes: s suppressed, d damped, h history, * valid, > best, i – internal,
              r RIB-failure, s stale, m multipath, b backup-path, f RT-Filter,
              x best-external, a additional-path, C RIB-compressed,
Origin codes: i – IGP, e – EGP, ? – incomplete
RPKI validation codes: V valid, I invalid, N Not found

     Network          Next Hop            Metric LocPrf         Weight       Path
* i   172.16.25.0/24   209.165.200.225          0    100              0        ?
R2#
```

```
R3 #show ip bgp summary
BGP router identifier 192.168.3.3, local AS number 65000
BGP table version is 4, main routing table version 4
Neighbor        V  AS     MsgRcvd  MsgSent    Tblver  InQ  OutQ  Up/Down   State/PfxRcd
192.168.2.2     4  65000        8        7         4    0     0  00:03:08             0
R3#
```

R2 is a route reflector, and R1 and R3 are route reflector clients. The route reflector learns the route to 172.16.25.0/24 from R1, but it does not advertise to R3. What is the reason the route is not advertised?

A. R2 does not have a route to the next hop, so R2 does not advertise the prefix to other clients.
B. Route reflector setup requires full IBGP mesh between the routers.
C. In route reflector setup, only classful prefixes are advertised to other clients.
D. In route reflector setups, prefixes are not advertised from one client to another.

Answer: A

NEW QUESTION 29
.....

Thank You for Trying Our Product

* 100% Pass or Money Back

All our products come with a 90-day Money Back Guarantee.

* One year free update

You can enjoy free update one year. 24x7 online support.

* Trusted by Millions

We currently serve more than 30,000,000 customers.

* Shop Securely

All transactions are protected by VeriSign!

100% Pass Your 300-410 Exam with Our Prep Materials Via below:

https://www.certleader.com/300-410-dumps.html